TRACENBERG
MARQUAGE TRACABILITÉ PERFORMANCE

Venus1 Series Fiber Laser Marking Machine

Fiber laser marking machines feature high beam quality, small size, high speed, long service life, and convenient and flexible installation. They are widely used in various metal and coating applications, medical devices, automotive parts, industrial bearings, aero-space components, and other fields requiring high depth, smoothness, and precision.





- Fully independently developed system with optimal algorithms ensuring marking speed and efficiency.
- Visual display of device status with a WYSIWYG editing interface.
- Abundant external output interfaces for interconnection and interlocking with peripheral devices.
- Embedded interface operation with one-click access to help documentation.


Industrial Accessories

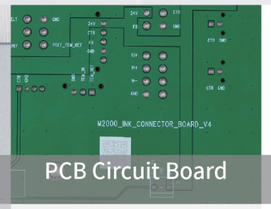
PCB Circuit Board


Metal Caps


Tin Foil


Beverages



Aluminum Alloy


Cosmetic Packaging


Stainless Steel

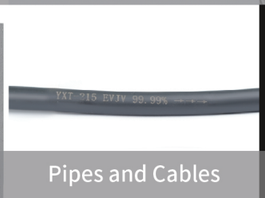
Pipes and Cables

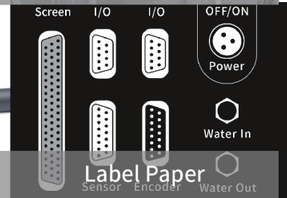

Label Paper

Machine Specification

20/30/50W

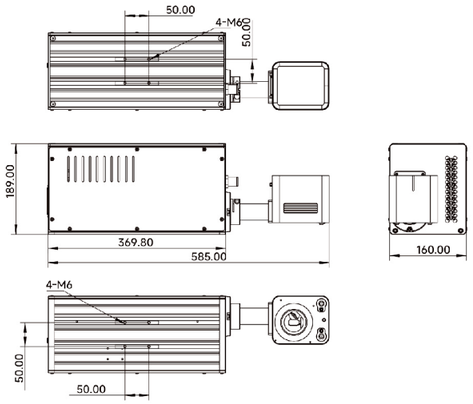

100W

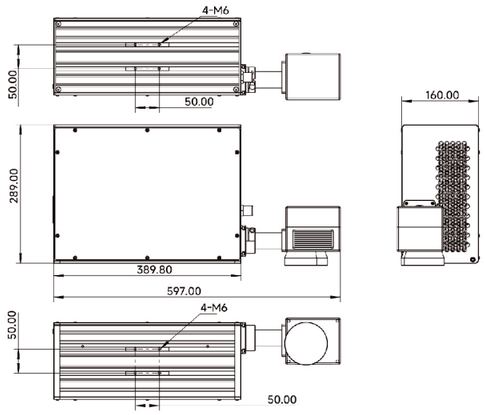

Machine Parameters

Model	1020F-1064F-C-IP43	1030F-1064F-C-IP43	1050F-1064F-C-IP43	1100F-1064F-C-IP43
Laser type	Fiber laser			
Laser wavelength	1064nm			
Laser power	20W	30W	50W	100W
Positioning method	Automatic red light positioning, focusing, preview			
Marking speed	Depends on the size and complexity of the surface material and the marking content;			
Number of marking lines	Unlimited			
Character height	0.6 to maximum engraving range			
Language	English, Simplified Chinese, Traditional Chinese, Korean, Japanese, Russian, Spanish, Persian and other languages.			
Graphic format	JPG，BMP，PNG，DXF，DWG，PLT，AI，SVG			
Barcode	CODE11,C25INTER,CODE39,EXCODE39,EAN128,CODABAR ,CODE128,CODE49,CODE93,UPCA, UPCE,EAN14,VIN,NVE18,ITF14,QRCODE,DATAMATRIX,MICROQR,PDF417,PDF417TRUNC			
Marking range	Standard (110*110), optional (50-300)			
Galvanometer scanning head	High-precision 2D digital scanning system			
Controller	10.1-inch color display, industrial touch screen			
Operating system	Embedded Linux security operating system			
Cooling system	Air cooling			
Host (L x W x H)	585*160*189mm			597*160*289mm
Protection level	IP43			
Product speed monitoring	Support AB phase encoder			
User interface	Photoelectric signal, encoder signal, alarm signal, I/O (NPN, PNP, switch type sensor), RS232 communication, etc.			
Power requirements	100V-240V/50-60HZ			
Machine power	⩽600W			
material	Aluminum alloy			
Operating temperature & humidity	External temperature 0°C—45°C Humidity ⩽95%; non-condensing; no vibration			
Laser life	Up to 100,000 hours			
Packing size (L x W x H)	790*380*310mm			710*360*400mm
Machine gross weight (kg)	18kg			24kg

Une Question ? Un Conseil ?
W: packinmar.ma
E: contact@packinmar.ma
P: +212 6 64 25 15 18

TRACENBERG
MARQUAGE TRACABILITÉ PERFORMANCE